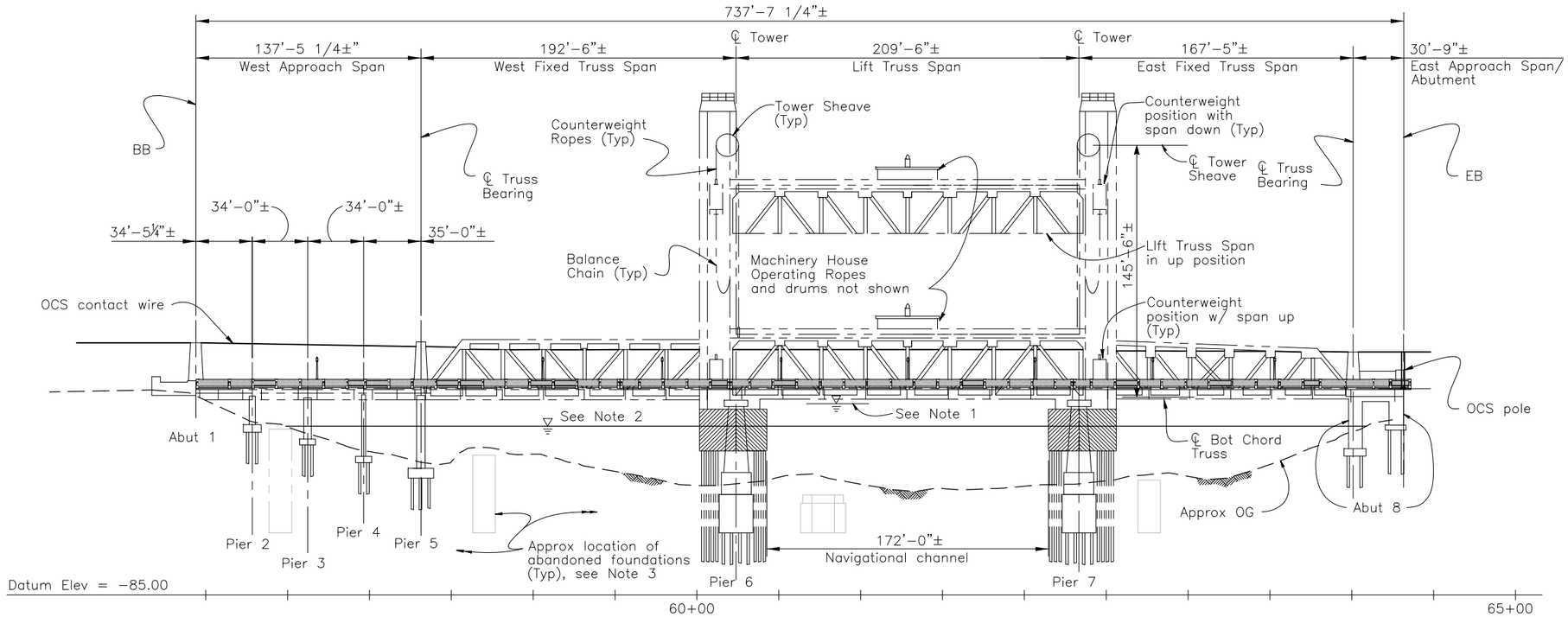

ELEVATION

Scale 1" = 40'-0"

NOTES:

1. Indicates 100 – Year High Water Elevation (31.8 Ft)
2. Indicates Ordinary High Water Elevation (18.0 Ft)
3. Approximate locations of abandoned foundations are from a previously removed bridge.

LEGEND

— — — — Indicates existing Structure

⇨ Indicates direction of traffic

LIFT SPAN MODIFICATIONS CONSTRUCTION SEQUENCE

- (A) Remove existing lightweight concrete deck (portion).
- (B) Install rail lock system.
- (C) Install FRP deck panels with temporary supports.
- (D) Install rails with temporary supports.
- (E) Install new light weight concrete deck.
- (F) Install polyester concrete overlay.
- (G) Install OCS including mounting brackets.

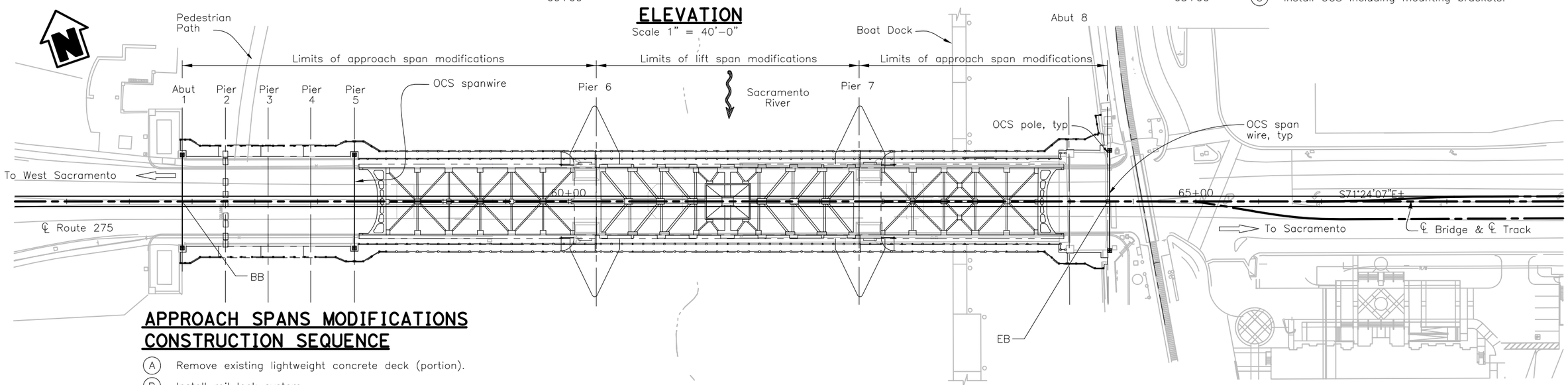

PLAN

Scale 1" = 40'-0"

APPROACH SPANS MODIFICATIONS CONSTRUCTION SEQUENCE

- (A) Remove existing lightweight concrete deck (portion).
- (B) Install rail lock system.
- (C) Install rails with temporary supports.
- (D) Install new light weight concrete in rail blockouts.
- (E) Install polyester concrete overlay.
- (F) Install OCS.

NO.	REVISION	BY	DATE

RECORD DRAWING DATE:

SCALE — HORIZONTAL: AS NOTED — VERTICAL: N/A

PROJECT NO.

CAD FILE:

DESIGN: TVK
DRAWN: VWF
CHECKED: JH
APPROVED:

PRELIMINARY ENGINEERING NOT FOR CONSTRUCTION

CITY OF WEST SACRAMENTO
ENGINEERING DIVISION
1110 WEST CAPITOL AVENUE
WEST SACRAMENTO, CA 95691

HDR
2365 Iron Point Road
Suite 300
Folsom, CA 95630
(916) 817-4700

DOWNTOWN/RIVERFRONT STREETCAR PROJECT

SACRAMENTO RIVER TOWER BRIDGE GENERAL PLAN

DWG. NO. S-1

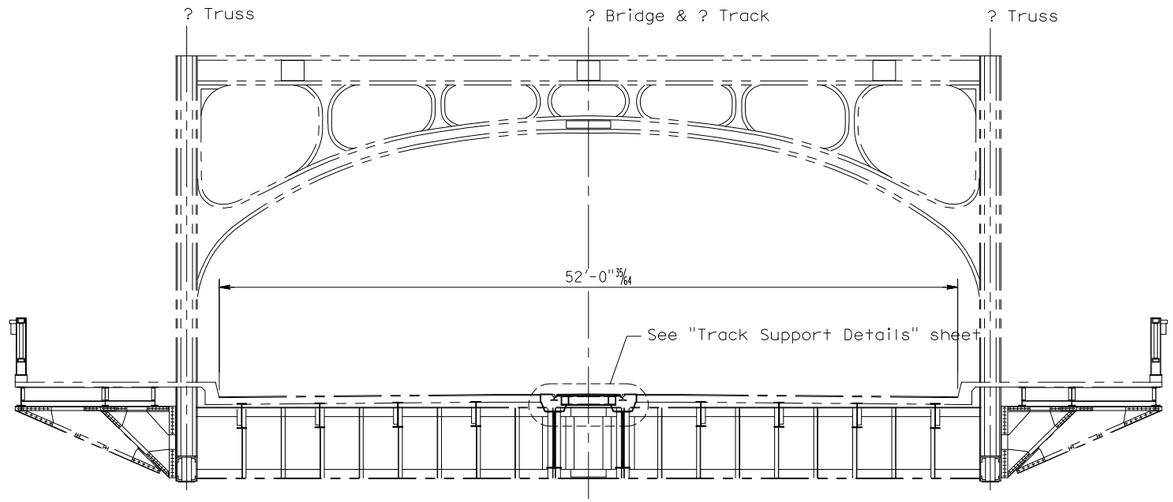

Note: Lift span details shown, approach span details similar.

TRUSS SECTION - PROPOSED TRACK MODIFICATIONS

Scale: N.T.S.

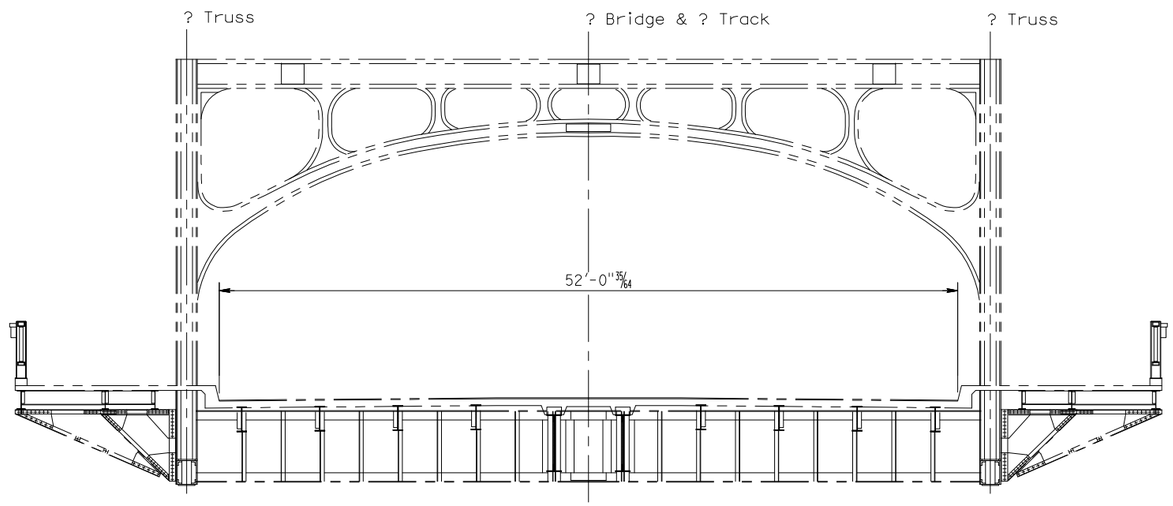

EXISTING TRUSS SECTION

Scale: N.T.S.

NO.	REVISION	BY	DATE

RECORD DRAWING DATE:

SCALE — HORIZONTAL: AS NOTED; VERTICAL: N/A

PROJECT NO.

CAD FILE:

DESIGN: TVK
DRAWN: VWF
CHECKED: JH
APPROVED:

PRELIMINARY ENGINEERING NOT FOR CONSTRUCTION

CITY OF WEST SACRAMENTO
ENGINEERING DIVISION
1110 WEST CAPITOL AVENUE
WEST SACRAMENTO, CA 95691

HDR
2365 Iron Point Road
Suite 300
Folsom, CA 95630
(916) 817-4700

DOWNTOWN/RIVERFRONT STREETCAR PROJECT

SACRAMENTO RIVER TOWER BRIDGE
TYPICAL SECTIONS

S-2

DWG. NO.

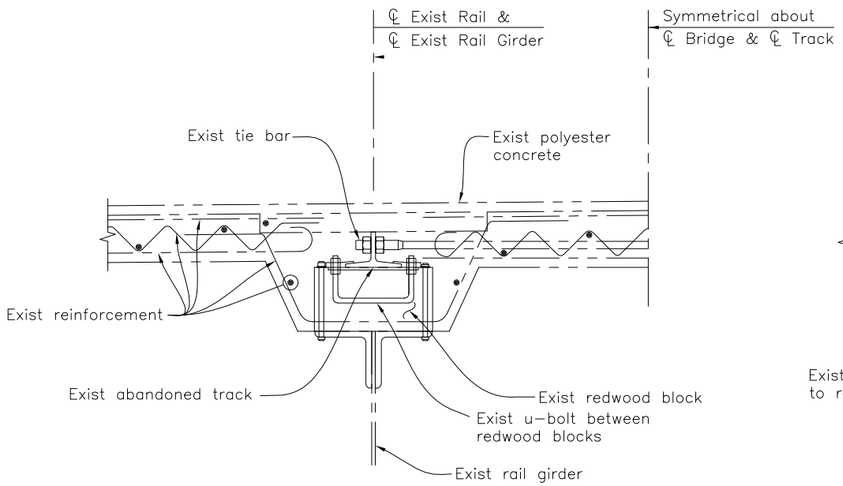

EXISTING CONDITION
1½"=1'-0'

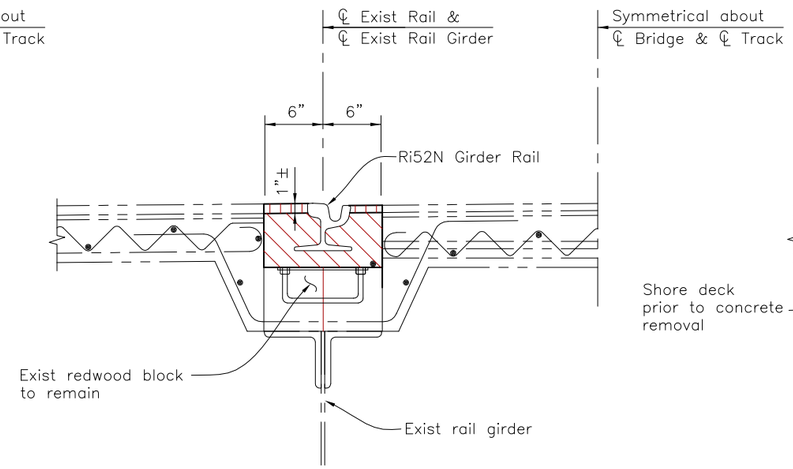

TYPICAL TRACK SECTION AT APPROACH SPANS
1½"=1'-0'

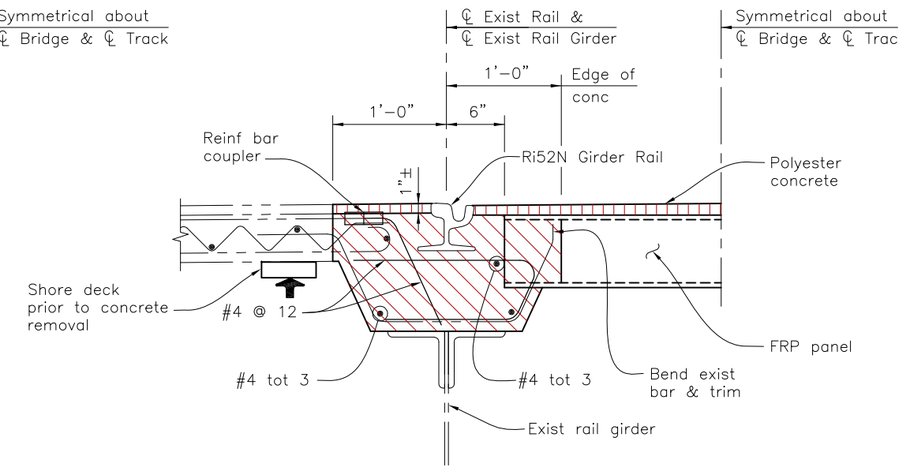

TYPICAL TRACK SECTION AT LIFT SPAN
1½"=1'-0'

Concrete Removal Bridge

Structure Lightweight Concrete Bridge

Polyester Concrete

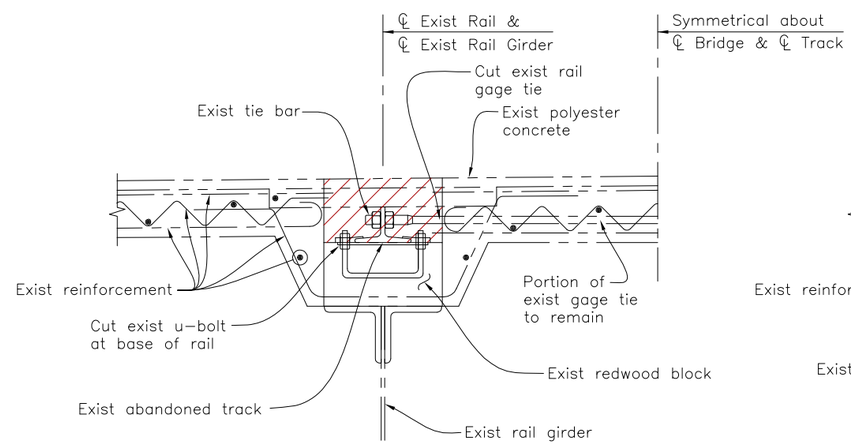

CONCRETE REMOVAL AT APPROACH SPANS
1½"=1'-0'

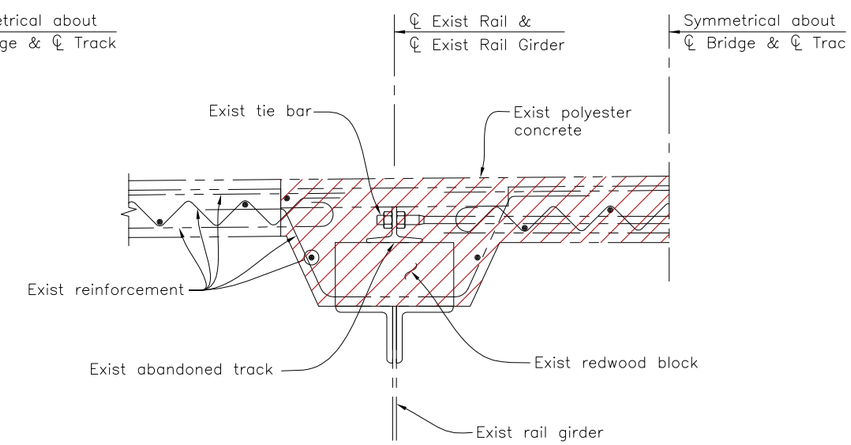

CONCRETE REMOVAL AT LIFT SPAN
1½"=1'-0'

NO.	REVISION	BY	DATE

RECORD DRAWING DATE:

SCALE — HORIZONTAL: AS NOTED; VERTICAL: N/A

PROJECT NO.

CAD FILE:

DESIGN: TVK
DRAWN: VWF
CHECKED: JH
APPROVED:

PRELIMINARY ENGINEERING NOT FOR CONSTRUCTION

CITY OF WEST SACRAMENTO
ENGINEERING DIVISION
1110 WEST CAPITOL AVENUE
WEST SACRAMENTO, CA 95691

HDR
2365 Iron Point Road
Suite 300
Folsom, CA 95630
(916) 817-4700

DOWNTOWN/RIVERFRONT STREETCAR PROJECT

SACRAMENTO RIVER TOWER BRIDGE TRACK SUPPORT DETAILS

DWG. NO. S-3

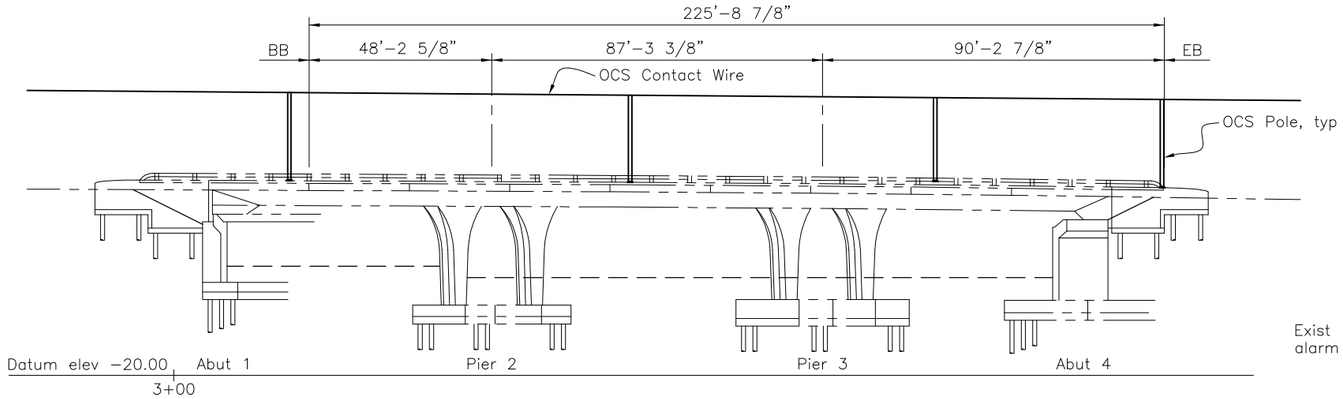

ELEVATION
1"=20'

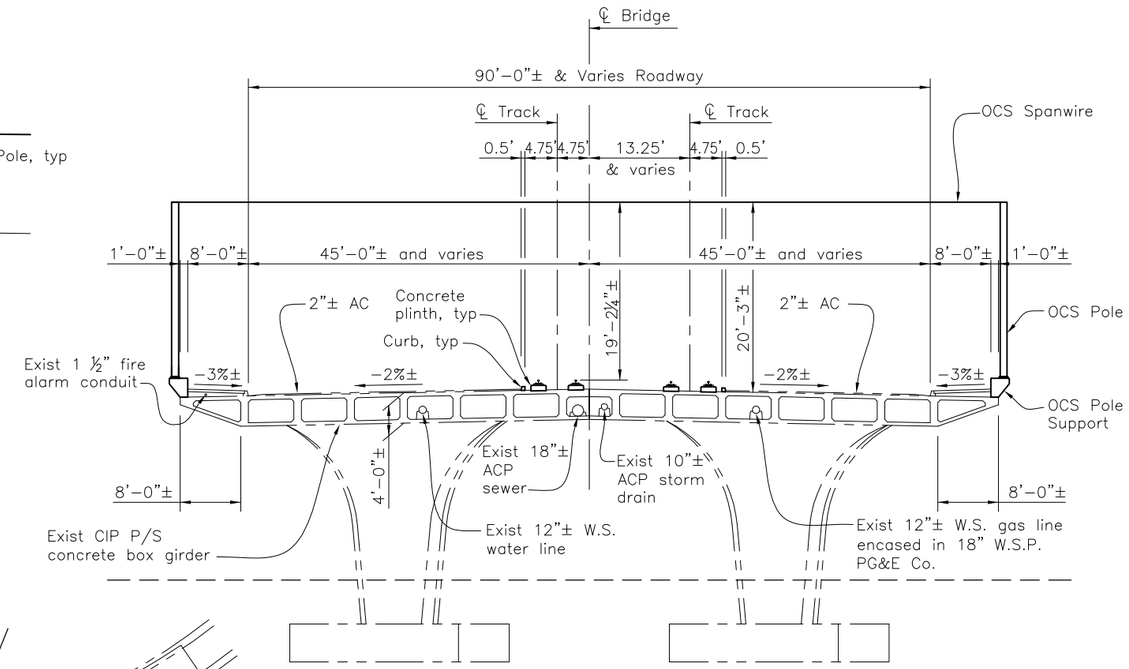

TYPICAL SECTION
1"=10'

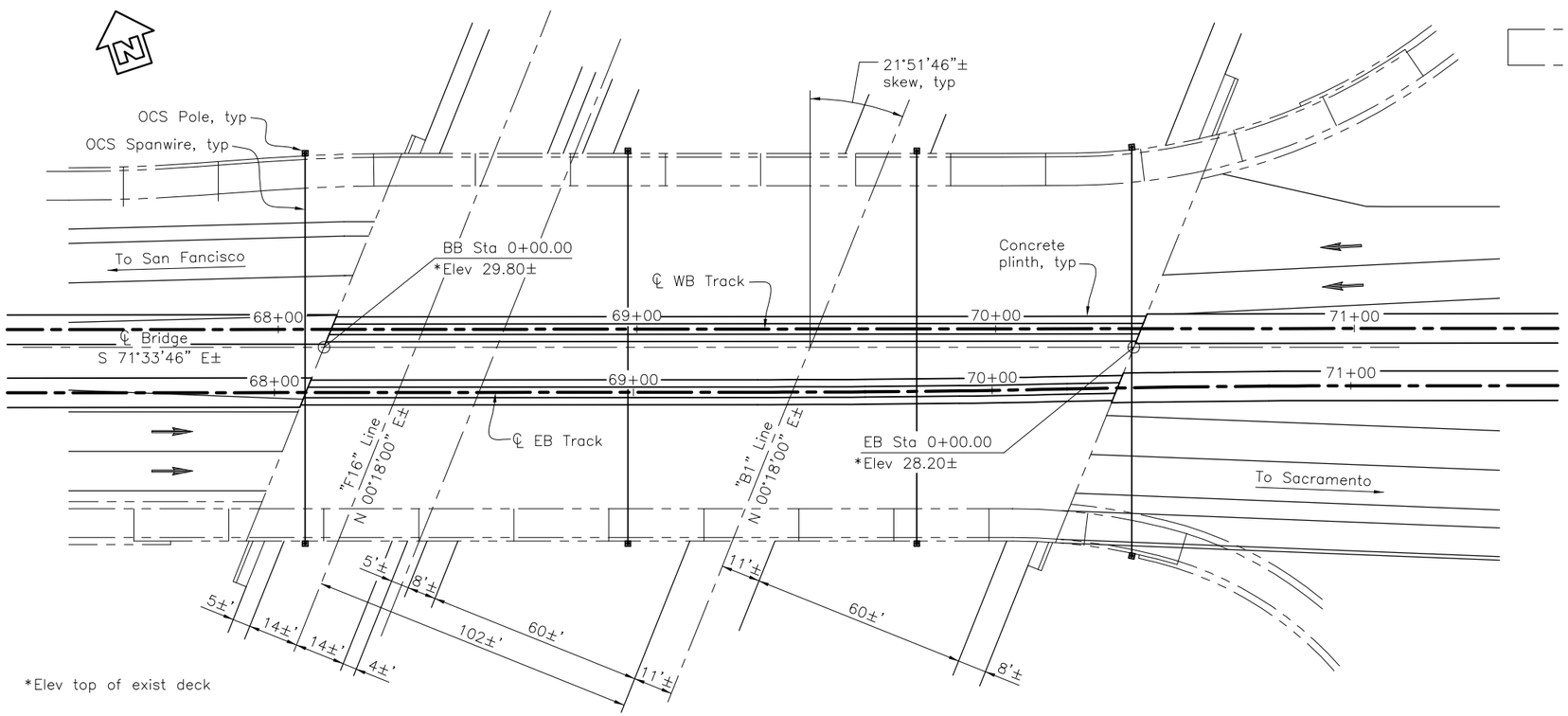

*Elev top of exist deck

PLAN
1"=20'

NO.	REVISION	BY	DATE

RECORD DRAWING DATE:

SCALE — HORIZONTAL: AS NOTED — VERTICAL: N/A

PROJECT NO.

CAD FILE:

DESIGN: TVK
DRAWN: VWF
CHECKED: JH
APPROVED:

PRELIMINARY ENGINEERING NOT FOR CONSTRUCTION

CITY OF WEST SACRAMENTO
ENGINEERING DIVISION
1110 WEST CAPITOL AVENUE
WEST SACRAMENTO, CA 95691

HDR
2365 Iron Point Road
Suite 300
Folsom, CA 95630
(916) 817-4700

DOWNTOWN/RIVERFRONT STREETCAR PROJECT

CAPITOL MALL SEPARATION
GENERAL PLAN

S-4
DWG. NO.

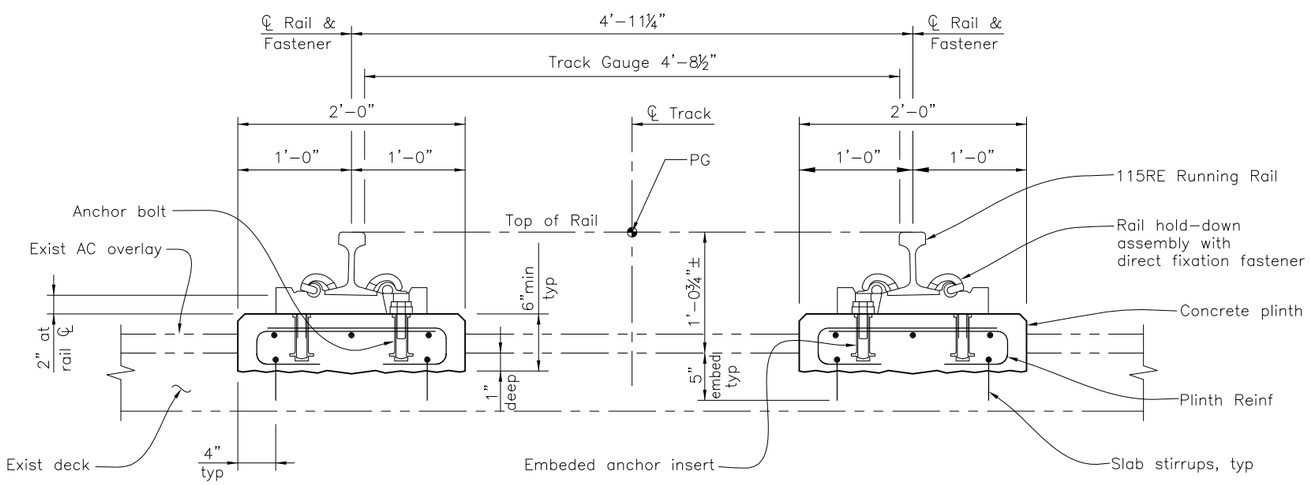

TYPICAL TRACK SECTION

1 ½"=1'-0'

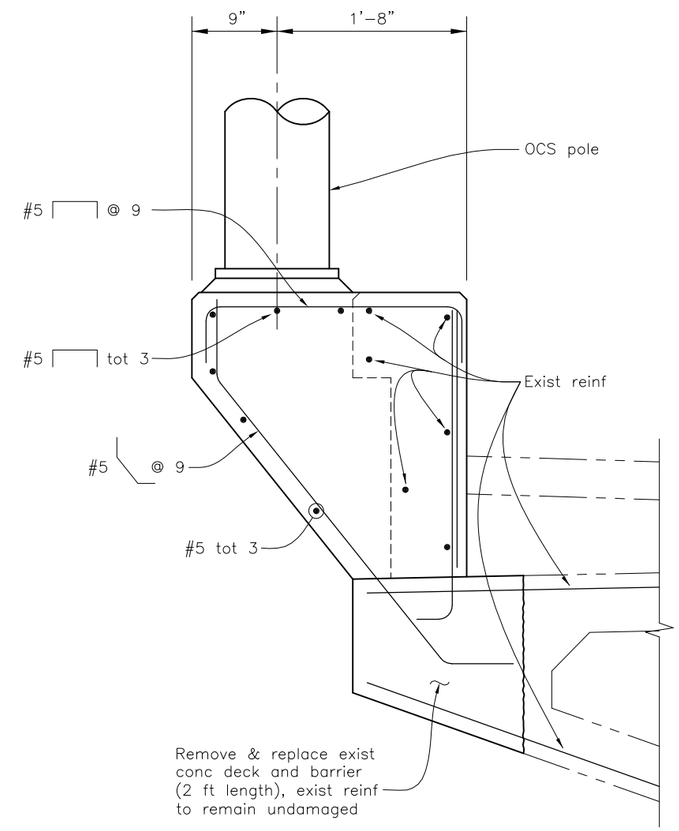

BARRIER MOUNTED OCS POLE DETAIL

1 ½"=1'-0'

NO.	REVISION	BY	DATE

RECORD DRAWING DATE:

SCALE: HORIZONTAL: AS NOTED; VERTICAL: N/A

PROJECT NO.

CAD FILE:

DESIGN: TVK
DRAWN: VWF
CHECKED: JH
APPROVED:

PRELIMINARY ENGINEERING NOT FOR CONSTRUCTION

CITY OF WEST SACRAMENTO
ENGINEERING DIVISION
1110 WEST CAPITOL AVENUE
WEST SACRAMENTO, CA 95691

HDR
2365 Iron Point Road
Suite 300
Folsom, CA 95630
(916) 817-4700

DOWNTOWN/RIVERFRONT STREETCAR PROJECT

CAPITOL MALL SEPARATION
TYPICAL TRACK SECTION

105 OF 105

S-5

DWG. NO.

DOWNTOWN/RIVERFRONT STREETCAR—BRIDGE CROSS-SECTIONS

TOWER BRIDGE

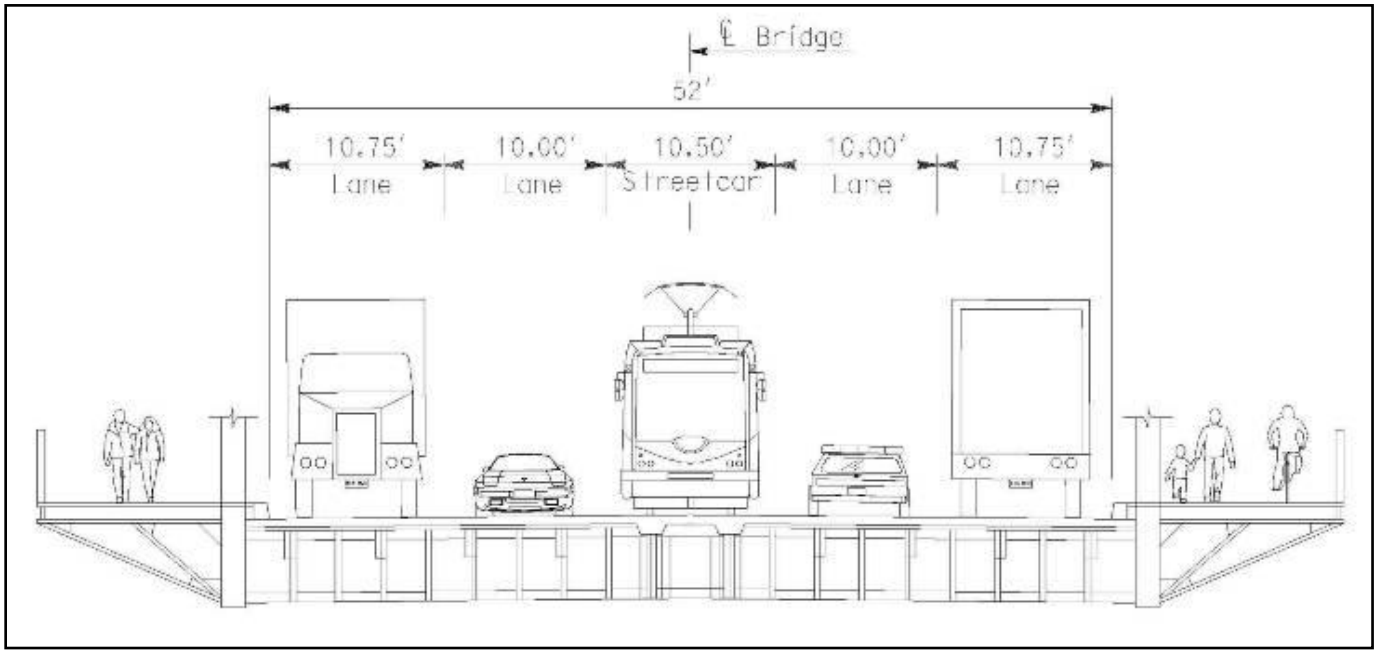
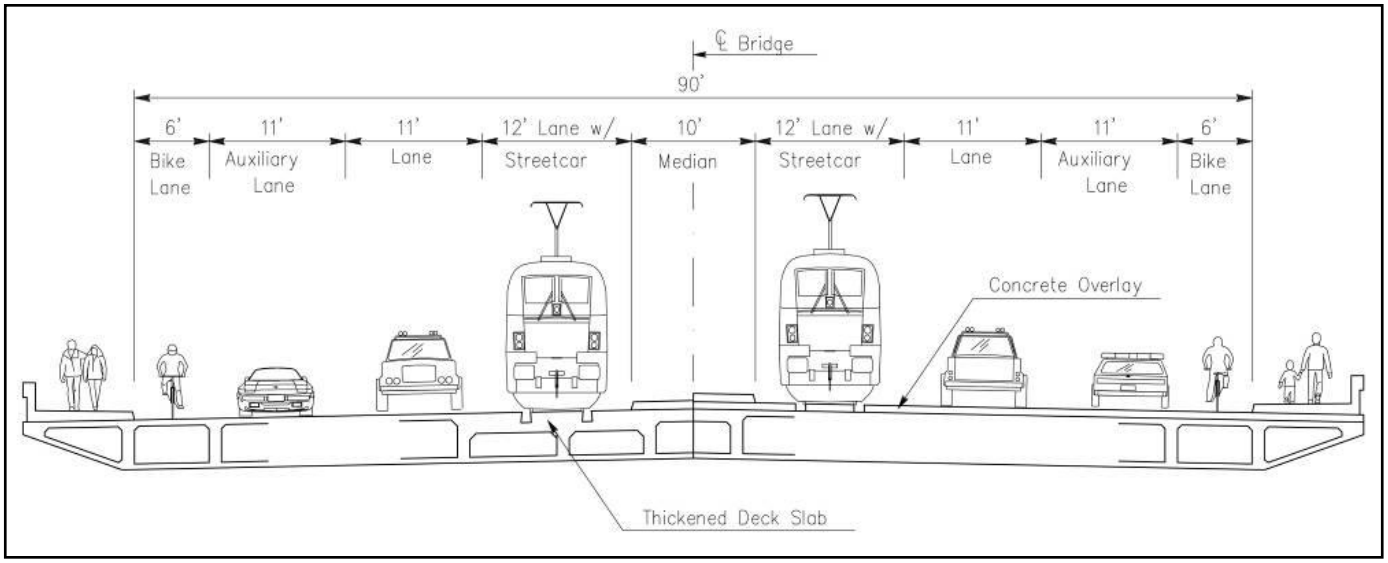
CAPITOL MALL NEAR FRONT STREET